BROADBAND COAXIAL ORTHOMODE TRANSDUCER

S. Piltyay, postgraduate student
National Technical University of Ukraine

Recently it has become a reality to use higher frequency bands in satellite telecommunication systems and in radioastronomy. Therefore an urgent and challenging problem of development of multiband feeds for large reflector antennas operating at orthogonal polarizations in wide frequency ranges in every band has been arisen. One of the successful ways to solve the problem is to utilize the coaxial feeds of a novel type, videlicet the ones with the partial dielectric loading [1–3], which provide, as distinguished from conventional coaxial feeds, low level of crosspolar radiation in wide operating frequency bands. In order to select and process radiosignals of orthogonal polarizations in such coaxial feeds it is necessary to design wideband coherent orthomode transducers (OMT) based on coaxial quad-ridged waveguides. The structure and the characteristics of a narrowband coaxial OMT are presented in [4, 5], wherein the high isolation between the ports with orthogonal polarizations has been achieved in the operation frequency range of the lower band. The reflection coefficient of this coaxial OMT is less than −15 dB and its isolation exceeds 39 dB.

The disadvantage of the coaxial OMT developed in [4, 5] is relatively narrow operation frequency range (i.e. 9.4 % relative bandwidth) in the lower operation band. A different coaxial OMT has been designed in [6] in order to broaden the operation frequency range of the lower band. It consists of input circular coaxial waveguide and two output rectangular waveguides. In the operation frequency band 3.4–4.2 GHz (i.e. 21% relative bandwidth) input reflection coefficient of the coaxial OMT presented in [6] is less than −20 dB, the isolation exceeds 30 dB. The disadvantage of such coaxial OMT is the impossibility to provide the coherent reception of orthogonally polarized electromagnetic waves in the whole operation frequency range because of space diversity of output rectangular waveguides. This disadvantage is absent in the OMT presented in [4, 5], but its relative operation frequency band is more than in 2 times narrower.

In this paper a novel configuration of a wideband coherent coaxial OMT is presented. Its input part is similar to the one presented in [4, 5], but the structure has been optimized for the operation with minimal reflection in enhanced C-band, namely 3.4–5.4 GHz (i.e. 45% relative bandwidth). As a result, the wideband coaxial OMT, which provides the coherent reception of orthogonally linearly polarized electromagnetic waves in 3.4–5.4 GHz frequency band, has been developed.

The general view of the coaxial OMT is shown in Fig. 1, and its inner structure is shown in Fig. 2. The OMT consists of elements of 3 main types, namely:

1) a turnstile junction between coaxial quad-ridged waveguide and 4 coaxial transmission lines;

2) 4 right-angle coaxial junctions placed in metal locating blocks for each polarization;
3) an antiphase power combiner/divider for each polarization.

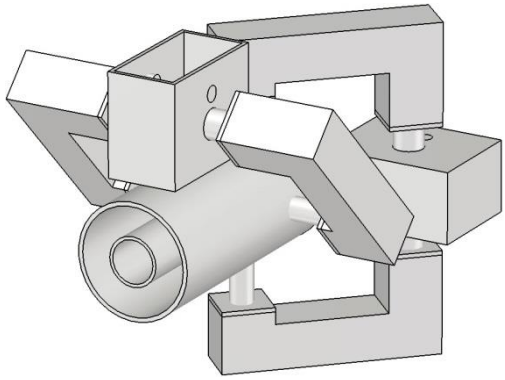

Fig. 1. General view of coaxial OMT

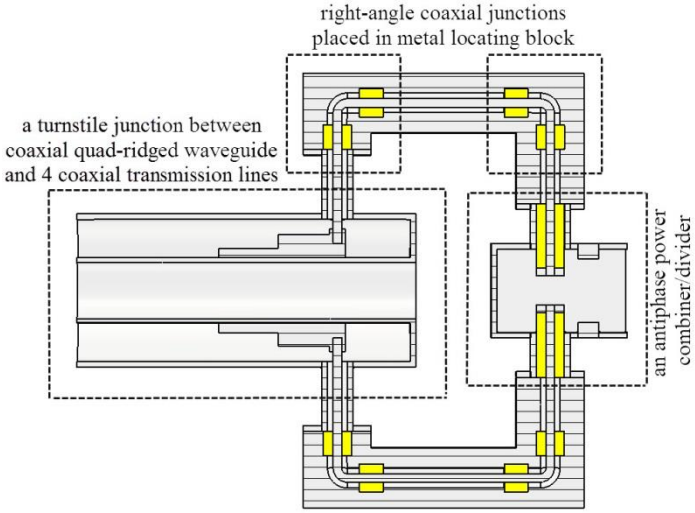

Fig. 2. The inner structure of coaxial OMT

Electromagnetic waves of two orthogonal linear polarizations from the input coaxial waveguide, which is depicted in Fig. 2 from the left side, pass to a turnstile junction. It separates orthogonally polarized signals to opposite coaxial lines. Then electromagnetic waves pass 2 right-angle coaxial junctions placed in metal locating blocks and join again in an antiphase power combiner/divider.

Each structural element was separately optimized using CST Microwave Studio software to provide low reflection of electromagnetic waves for both polarizations in the coaxial OMT. After this the final optimization has been performed varying the lengths and the heights of locating blocks, matching stubs and the location of matching stubs inside antiphase power combiner/divider.

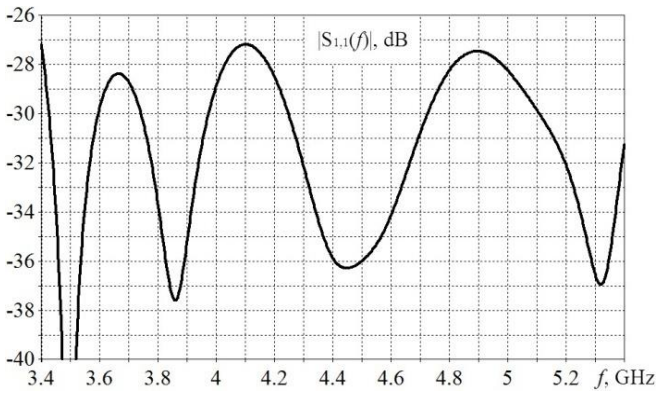

Fig. 3. The reflection coefficient of OMT.

The frequency dependence of minimized reflection coefficient is shown in Fig. 3. It is the same for both linear polarizations. The reflection coefficient of the OMT is less than −27 dB in the whole operation frequency band 3.4–5.4 GHz. The relative operation frequency bandwidth of the coaxial OMT developed, which equals 45%, exceeds the relative operation frequency bandwidth of the OMT presented in [6] more than in 2 times and the relative operation frequency bandwidth of OMT from [4, 5] — more than in 4 times with the lower reflection coefficient.

Conclusions

The wideband coaxial OMT for the frequency band 3.4–5.4 GHz, which provides the coherent reception of orthogonally linearly polarized electromagnetic waves in the whole operation frequency band, has been developed. The reflection coefficient of the coaxial OMT developed is less than −27 dB in the whole operation frequency band 3.4–5.4 GHz.

The wideband coaxial OMT developed can be used in satellite telecommunication systems, in radioastronomy and in other dual-polarized systems.

References

1. Dubrovka F. F., Ovsianyk Yu. A., Dubrovka R. F., UA Patent No. 88320 (2009).

2. Dubrovka F. F. Radiation and matching characteristics of a novel dual-band dielectric loaded coaxial horn / F. F. Dubrovka, Yu. A. Ovsianyk, R. F. Dubrovka // Radioelectronics and Communications Systems. — December 2012. — vol. 55, № 12. — P. 559—562.

3. Ovsianyk Yu. A. Analysis of dielectric loaded hybrid mode coaxial horns / Yu. A. Ovsianyk, F. F. Dubrovka, R. F. Dubrovka // Radioelectronics and Communications Systems. — 2013. — vol. 56, № 1. — P. 1—19.

4. Granet C. The designing, manufacturing, and testing of a dual-band feed system for the Parkes radio telescope / C. Granet, H. Z. Zhang, A. R. Forsyth, G. R. Graves, P. Doherty, K. J. Greene, G. L. James, P. Sykes, T. S. Bird, M. W. Sinclair, G. Moorey, R. N. Manchester // IEEE Antennas Propagation Magazine. — June 2005. — vol. 47, № 3 — P. 13–19.

5. Granet C. A dual-band feed system for the Parkes radio telescope / C. Granet, H. Z. Zhang, K. J. Greene, G. L. James, A. R. Forsyth, T. S. Bird, R. N. Manchester, M. W. Sinclair, P. Sykes // IEEE Int. Antennas Propagat. Symp. Dig. — July 2001. — vol. 39. — P. 296—299.

6. Dubrovka F. F. A novel broadband coaxial orthomode transducer with high port isolation / F. F. Dubrovka, D. O. Vasylenko // Proc. Int. Conf. on Antenna Theory and Techniques (ICATT 2009), Lviv, Ukraine, 2009, P. 334—336.

Анотація

Розроблено широкосмуговий ортомодовий перетворювач на основі коаксіального чотириреберного хвилеводу для діапазону частот 3,4–5,4 ГГц. Коефіцієнт відбиття розробленого коаксіального ОМП нижчий за −27 дБ. Розроблений ОМП може використовуватись у різних двополяризаційних радіотехнічних системах.

Ключові слова: ортомодовий перетворювач, коаксіальний ребристий хвилевід.

Аннотация

Разработан широкополосный ортомодовий преобразователь на основе коаксиального четырехреберный волновода для диапазона частот 3,4-5,4 ГГц. Коэффициент отражения разработанного коаксиального ОМП ниже −27 дБ. Разработанный ОМП может использоваться в различных двухполяризацийних радиотехнических системах.

Ключевые слова: ортомодовий преобразователь, коаксиальный ребристый волновод.

Abstract

A wideband orthomode transducer based on coaxial quad-ridged waveguide is developed for frequency band 3.4–5.4 GHz. The reflection coefficient of the coaxial OMT developed is less than −27 dB. The OMT developed can be used in different dual-polarized radioengineering systems.

Keywords: orthomode transducer, coaxial ridged waveguide.